EX50 DRUM

FEATURES

- STURDY STRUCTURE
- FLANGED COMPONENTS
- ANTI-NOISE FILTER
- THERMAL PROTECTION
- BUILT-IN BYPASS VALVE
- SUCTION PIPE WITH INTEGRATED FILTER
- UL LISTED VERSION AVAILABLE

The PIUSI EX50 DRUM is a complete pump transfer kit expressly engineered for ATEX/IECEx areas. This system is composed of a high-efficiency pump, manual or automatic nozzle and a telescopic suction hose. Thanks to the flanged components, this transfer set allows users to replace any component without using sealants thus creating maximum versatility and adaptability to any kind of condition. K33 mechanical meter available on request. Upon request it is available with different voltages and 60 Hz frequency.

Atex II 2 G

On request

PIUSI EX50 DRUM WITH METER AND FILTER

PERFORMANCE

UP TO 50 L/MIN	1100 MM
FLOW RATE	SUCTION PIPE
±1%	10µm (85%)
ACCURACY	FILTERING CAPACITY

EX50 DRUM WITH AUTOMATIC NOZZLE

EX50 DRUM WITH MANUAL NOZZLE

OUR PUMPS COMPLIES WITH THE FOLLOWING MARKING ATEX/IECEx

II	2	G	Ex	d	IIA	T4	Gb
GROUP	CATEGORY	TYPE OF EXPLOSIVE ATMOSPHERE	PERMANENT PREFIX	PROTECTION METHOD	GAS GLASS	TEMPERATURE CLASS	EQUIPMENT PROTECTION LEVEL

PACKAGING

CODE	WEIGHT		PACKAGING		
	KG	LBS	MM	INCH	PCS/BOX
WITHOUT METER					
F00372000	10	22	600X400X290	23,6X13,7X11,4	1
F00372010	10	22	600X400X290	23,6X13,7X11,4	1
F00372020	7,9	17,4	345X175X225	-	1
WITH METER					
F0037500A	12	22	600X400X290	23,6X13,7X11,4	1
F0037501A	12	22	600X400X290	23,6X13,7X11,4	1

ANY BIODIESEL · AIR · ANTIFREEZE · AdBlue® · BIODIESEL · DIESEL · FOOD · GASOLINE · GREASE · KEROSENE · OIL · WATER · WINDSCREEN

CHART

EX50 DRUM

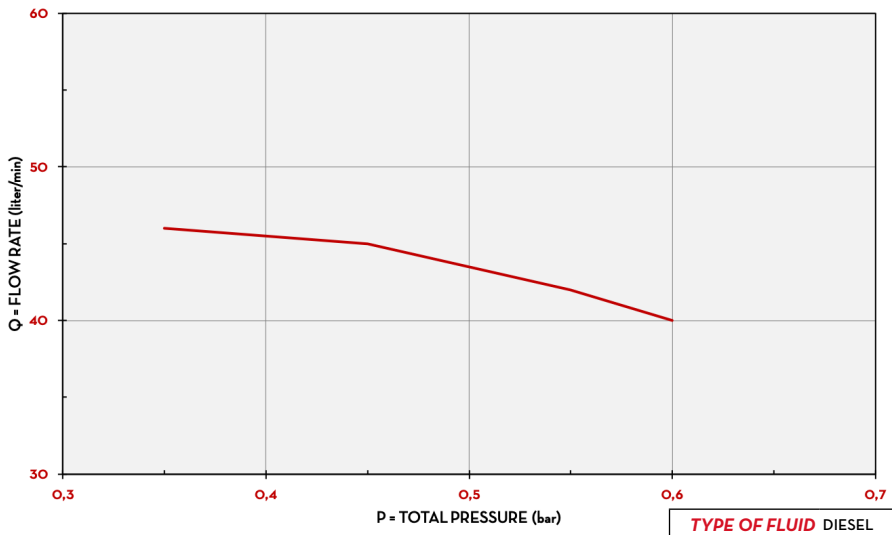

TYPE OF FLUID	DIESEL
TEMPERATURE	20/23°C

IN THE BOX

- EX50 PUMP
- TELESCOPIC SUCTION PIPE
- DELIVERY HOSE
- GASOLINE FILTER
- A60 ATEX NOZZLE
- 2" CONNECTOR
- K33 ATEX METER (ON SELECTED VERSION)
- INSTRUCTION MANUAL

DETAILS

2" CONNECTOR

INTEGRATED FILTER

BENDING PROTECTION

DIMENSIONS

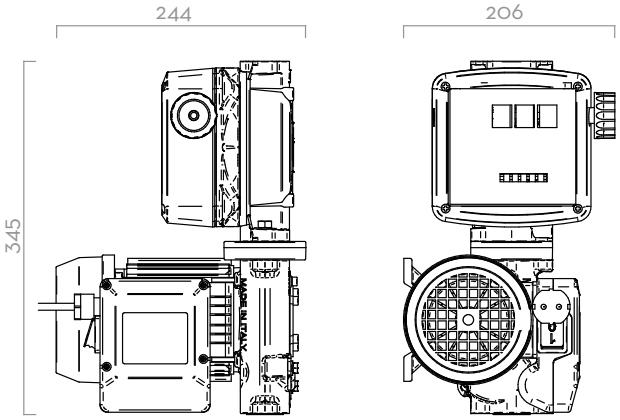

Dimensions expressed in millimeters

COMPONENTS

- PUMP:
  EX50
- METER:
  K33 ATEX
- NOZZLE:
  A60 ATEX
  SELF3000
- FILTER:
  GASOLINE FILTR

TECHNICAL DATA

CODE	DESCRIPTION	FLUIDS TYPE	FLOW RATE		VOLTAGE			METER	NOZZLE	FILTER	INLET	HOSE	
			L/MIN	GPM	AC V./HZ DC VOLT	POWER WATT	AMP. MAX.	TYPE	TYPE		BSP	LENGTH MM	Ø
WITHOUT METER													
F00372000	DRUM EX50 12V DC ATEX + MAN. NOZZLE	D G K	50	13	12	250	21	-	SELF3000	YES	1"	4	3/4"
F00372010	DRUM EX50 12V DC ATEX + AUT. NOZZLE	D G K	50	13	12	250	21	-	A60	YES	1"	4	3/4"
F00372020	KIT DRUM EX50 12V DC ATEX	D G K	50	13	12	250	21	-	NO	NO	1"	-	-
WITH METER													
F0037500A	DRUM EX50 12V DC K33 ATEX + MAN. NOZZLE	D G K	50	13	12	250	21	K33	SELF3000	YES	1"	4	3/4"
F0037501A	DRUM EX50 12V DC K33 ATEX + AUT. NOZZLE	D G K	50	13	12	250	21	K33	A60	YES	1"	4	3/4"

(*) AVAILABLE WITH DIFFERENT VOLTAGES AND 60 HZ FREQUENCIES. COMPATIBLE FLUIDS: DIESEL, KEROSENE, PETROL, PETROL/ALCOHOL MIXTURE UP TO 15%, AVGAS 100/100LL (PUMP AND FLOW METER ONLY), JET A/A1 (PUMP AND FLOW METER ONLY), ASPEN 2/4